DATA SHEET: GUSM5 SERIES

GU10 5W LED Lamp

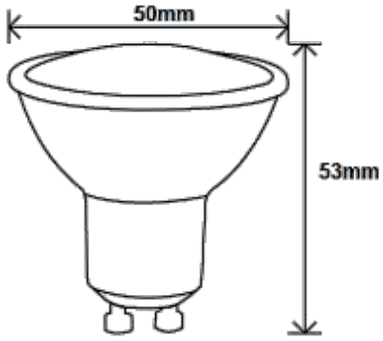

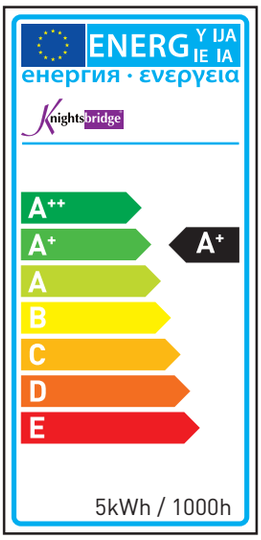

MLA part code:	GUSM5WW	GUSM5CW
Description:	GU10 5W Wide Beam LED Lamp	
Finishes:	White	
Weight (kg):	0.073	
Wattage (W):	5	
Lamp base:	GU10	
Lumens:	410 lm	450 lm
Lumens per Watt:	82	90
Total circuit Power (W):	5	
Beam Angle:	120°	
Overall dimensions (mm):	53 (L) 50 (D)	
CCT:	2700K	4000K
LED Colours:	**Warm White**	**Cool White**
LED type:	SMD	
Power Factor:	0.5	
Colour rendering (Ra):	>80	
Running current (I):	0.02A	
Input voltage:	Mains 230V 50Hz	
Construction:	Ceramic	
Driver required:	No	
Class:	Class II	
IP rating:	IP20	
Life span:	30,000 hrs	
Warranty:	3 Years	
Photometric data:	Yes	
Dimmable:	No	
Instruction sheet:	No	
Origin of Manufacture:	China	
Declaration of Conformity (held on file):	Yes	
Manufactured & accordance with:	EN60598	
EAN:	5055832906100	5055832905608

ML Accessories Ltd. reserves the right to withdraw, improve or modify any design without prior notification.
ML Accessories Ltd. cannot be held responsible for the incorrect application of any product.
ISSUE BAFEB15V01